COTEK

SP Series

700~4000W Pure Sine Wave Inverter

- Wide DC input voltage range
- Output AC voltage & frequency selectable
- Light weight and low-profile design
- Stylish ID design
- Advanced protection features

User Benefits

Wide input voltage range (10.5~16.5V)

Fulfill the majority user applications

RS-232 communication

Alternative solution to set the parameters

Power saving mode selectable

Suitable for different user scenario to active power saving mode

Input & output fully isolation

Prevent from electrical shock

Output voltage and frequency selectable

Applicable range: ① 100~120V
② 200~240V
③ 50 / 60Hz

Low profile design

Saving space for installation

Specification

SP-700

	Model	SP-700-112	SP-700-124	SP-700-148	SP-700-212	SP-700-224	SP-700-248
Output	Rating Power	700W (VA)					
	Surge Power (1 Sec.)	<1230W (VA)					
	Maximum Output Power (1 Min)	>700W (VA) ~ 810W (VA) (100% ~ 115%)					
	Waveform	Pure Sine Wave (THD<5% Normal Load ①)			Pure Sine Wave (THD<3% Normal Load ②)		
	Output Voltage	100 / 110 / 115 / 120 VAC ± 5% (Dip Switch Selectable)			200 / 220 / 230 / 240 VAC ± 3% (Dip Switch Selectable)		
	Output Frequency	50 / 60 Hz ± 0.5% (Dip Switch Selectable)					
Input	DC Voltage	12VDC	24VDC	48VDC	12VDC	24VDC	48VDC
	Voltage Range	10.5~16.5VDC	21.0~33.0VDC	42.0~66.0VDC	10.5~16.5VDC	21.0~33.0VDC	42.0~66.0VDC
	No Load Current	≦1.5A@12VDC	≦0.8A@24VDC	≦0.5A@48VDC	≦1.5A@12VDC	≦0.8A@24VDC	≦0.5A@48VDC
	Power Saving Mode	<0.1A@12VDC	<0.06A@24VDC	<0.05A@48VDC	<0.1A@12VDC	<0.06A@24VDC	<0.05A@48VDC
	Efficiency (Max.)	91%	93%	93%	91%	93%	94%

SP-1000

	Model	SP-1000-112	SP-1000-124	SP-1000-148	SP-1000-212	SP-1000-224	SP-1000-248
Output	Rating Power	1000W (VA)					
	Surge Power (1 Sec.)	<1750W (VA)					
	Maximum Output Power (1 Min)	>1000W (VA) ~ 1150W (VA) (100% ~ 115%)					
	Waveform	Pure Sine Wave (THD<5% Normal Load ①)			Pure Sine Wave (THD<3% Normal Load ②)		
	Output Voltage	100 / 110 / 115 / 120 VAC ± 5% (Dip Switch Selectable)			200 / 220 / 230 / 240 VAC ± 3% (Dip Switch Selectable)		
	Output Frequency	50 / 60 Hz ± 0.5% (Dip Switch Selectable)					
Input	DC Voltage	12VDC	24VDC	48VDC	12VDC	24VDC	48VDC
	Voltage Range	10.5~16.5VDC	21.0~33.0VDC	42.0~66.0VDC	10.5~16.5VDC	21.0~33.0VDC	42.0~66.0VDC
	No Load Current	≦1.5A@12VDC	≦0.8A@24VDC	≦0.5A@48VDC	≦1.5A@12VDC	≦0.8A@24VDC	≦0.4A@48VDC
	Power Saving Mode	<0.1A@12VDC	<0.06A@24VDC	<0.05A@48VDC	<0.1A@12VDC	<0.05A@24VDC	<0.05A@48VDC
	Efficiency (Max.)	92%	93%	93%	92%	94%	94%

Protection	Input Under-voltage Protection	10.5±0.3VDC	21.0±0.5VDC	42.0±1.0VDC	10.5±0.3VDC	21.0±0.5VDC	42.0±1.0VDC
	Input Under-voltage Alarm	11.0±0.3VDC	22.0±0.5VDC	44.0±1.0VDC	11.0±0.3VDC	22.0±0.5VDC	44.0±1.0VDC
	Input Under-voltage Recovery	12.5±0.3VDC	25.0±0.5VDC	50.0±1.0VDC	12.5±0.3VDC	25.0±0.5VDC	50.0±1.0VDC
	Input Over-voltage Protection	16.5±0.3VDC	33.0±0.5VDC	66.0±1.0VDC	16.5±0.3VDC	33.0±0.5VDC	66.0±1.0VDC
	Input Over-voltage Recovery	14.5±0.3VDC	29.0±0.5VDC	58.0±1.0VDC	14.5±0.3VDC	29.0±0.5VDC	58.0±1.0VDC
Environment	Operating Temperature	-20 ~ +40℃					
	Storage Temp. & Humidity	-30 ~ +70℃, 10~95% RH					
Safety & EMC	Safety Standards	Certified UL 458 (UL only for GFCI receptacles)		--	Certified EN60950-1		
	EMC Standards	Certified FCC class B			Certified EN55022 class B, EN55024 EN61000-3-2, -3-3 EN61000-4-2, 3, 4, 5, 6, 8, 11		
	E-Mark	--			Certified CISPR 25; ISO 7637-2		
Control & Signal	LED Indicator	Input voltage level, output load level and faulty status					
	Accessory (Optional)	Remote Control : CR-8 / CR-16A ; Transfer Switch : TR-40					
Other Information	Dimension (WxHxD)	SP-700 200x83x330 mm / 7.87x3.27x12.99 inch SP-1000 200x83x372 mm / 7.87x3.27x14.65 inch					
	Packing	SP-700 : 2.6kg; 6pcs / 16.6kg / 3.59CUFT; SP-1000 : 3.26kg; 4pcs / 14kg / 2.65CUFT					

① : Normal Condition : Vin=12.5V / 25V / 50V Vo=100 / 110 / 115 / 120 VAC 80% Full load (PF=1.0)
② : Normal Condition : Vin=12.5V / 25V / 50V Vo=200 / 220 / 230 / 240 VAC 80% Full load (PF=1.0)

Subject to change witout prior notice

SP-1500

	Model	SP-1500-112	SP-1500-124	SP-1500-148	SP-1500-212	SP-1500-224	SP-1500-248
Output	Rating Power	1500W (VA)					
	Surge Power (1 Sec.)	<2650W (VA)					
	Maximum Output Power (1 Min)	>1500W (VA) ~ 1730W (VA) (100% ~ 115%)					
	Waveform	Pure Sine Wave (THD<5% Normal Load ①)			Pure Sine Wave (THD<3% Normal Load ②)		
	Output Voltage	100 / 110 / 115 / 120 VAC ± 5% (Dip Switch Selectable)			200 / 220 / 230 / 240 VAC ± 3% (Dip Switch Selectable)		
	Output Frequency	50 / 60 Hz ± 0.5% (Dip Switch Selectable)					
Input	DC Voltage	12VDC	24VDC	48VDC	12VDC	24VDC	48VDC
	Voltage Range	10.5~16.5VDC	21.0~33.0VDC	42.0~66.0VDC	10.5~16.5VDC	21.0~33.0VDC	42.0~66.0VDC
	No Load Current	≦1.8A@12VDC	≦1.0A@24VDC	≦0.5A@48VDC	≦1.8A@12VDC	≦1.0A@24VDC	≦0.5A@48VDC
	Power Saving Mode	<0.1A@12VDC	<0.05A@24VDC	<0.05A@48VDC	<0.1A@12VDC	<0.05A@24VDC	<0.05A@48VDC
	Efficiency (Max.)	91%	92%	93%	93%	94%	94%

SP-2000

	Model	SP-2000-112	SP-2000-124	SP-2000-148	SP-2000-212	SP-2000-224	SP-2000-248
Output	Rating Power	2000W (VA)					
	Surge Power (1 Sec.)	<3500W (VA)					
	Maximum Output Power (1 Min)	>2000W (VA) ~ 2300W (VA) (100% ~ 115%)					
	Waveform	Pure Sine Wave (THD<5% Normal Load ①)			Pure Sine Wave (THD<3% Normal Load ②)		
	Output Voltage	100 / 110 / 115 / 120 VAC ± 5% (Dip Switch Selectable)			200 / 220 / 230 / 240 VAC ± 3% (Dip Switch Selectable)		
	Output Frequency	50 / 60 Hz ± 0.5% (Dip Switch Selectable)					
Input	DC Voltage	12VDC	24VDC	48VDC	12VDC	24VDC	48VDC
	Voltage Range	10.5~16.5VDC	21.0~33.0VDC	42.0~66.0VDC	10.5~16.5VDC	21.0~33.0VDC	42.0~66.0VDC
	No Load Current	≦1.8A@12VDC	≦1.0A@24VDC	≦0.5A@48VDC	≦1.8A@12VDC	≦1.0A@24VDC	≦0.5A@48VDC
	Power Saving Mode	<0.1A@12VDC	<0.05A@24VDC	<0.05A@48VDC	<0.1A@12VDC	<0.05A@24VDC	<0.05A@48VDC
	Efficiency (Max.)	92%	93%	94%	94%	94%	95%

Protection	Input Under-voltage Protection	10.5±0.3VDC	21.0±0.5VDC	42.0±1.0VDC	10.5±0.3VDC	21.0±0.5VDC	42.0±1.0VDC
	Input Under-voltage Alarm	11.0±0.3VDC	22.0±0.5VDC	44.0±1.0VDC	11.0±0.3VDC	22.0±0.5VDC	44.0±1.0VDC
	Input Under-voltage Recovery	12.5±0.3VDC	25.0±0.5VDC	50.0±1.0VDC	12.5±0.3VDC	25.0±0.5VDC	50.0±1.0VDC
	Input Over-voltage Protection	16.5±0.3VDC	33.0±0.5VDC	66.0±1.0VDC	16.5±0.3VDC	33.0±0.5VDC	66.0±1.0VDC
	Input Over-voltage Recovery	14.5±0.3VDC	29.0±0.5VDC	58.0±1.0VDC	14.5±0.3VDC	29.0±0.5VDC	58.0±1.0VDC
Environment	Operating Temperature	-20 ~ +40℃					
	Storage Temp. & Humidity	-30 ~ +70℃, 10~95% RH					
Safety & EMC	Safety Standards	Certified UL 458 (UL only for GFCI receptacles)		--	Certified EN60950-1		
	EMC Standards	SP-1500 Certified FCC class B SP-2000 Certified FCC class A④			Certified EN55022③④, EN55024 EN61000-3-2, -3-3 EN61000-4-2, 3, 4, 5, 6, 8, 11		
	E-Mark	--			Certified CISPR 25; ISO 7637-2		
Control & Signal	LED Indicator	Input voltage level, output load level and faulty status					
	Accessory (Optional)	Remote Control : CR-8 / CR-16A ; Transfer Switch : TR-40					
Other Information	Dimension (WxHxD)	SP-1500 248x83x421 mm / 9.76x3.27x16.57 inch SP-2000 248x83x443 mm / 9.76x3.27x17.44 inch					
	Packing	SP-1500 : 4.14kg; 4pcs / 17.56kg / 3.58CUFT; SP-2000 : 5.24kg; 4pcs / 21.96kg / 3.58CUFT					

① : Normal Condition : Vin=12.5V / 25V / 50V Vo=100 / 110 / 115 / 120 VAC 80% Full load (PF=1.0)
② : Normal Condition : Vin=12.5V / 25V / 50V Vo=200 / 220 / 230 / 240 VAC 80% Full load (PF=1.0)
③ : SP-1500 Certified EN55022 class B; SP-1500 Certified EN55022 class A
④ : Warning : This is a class A product. In a domestic environment this product may cause radio interference in which case the user may be required to take adequate measures.

Subject to change witout prior notice

Specification

SP-3000

	Model	SP-3000-112	SP-3000-124	SP-3000-148	SP-3000-212	SP-3000-224	SP-3000-248
Output	Rating Power	3000W (VA)					
	Surge Power (1 Sec.)	<6000W (VA)					
	Maximum Output Power (1 Min)	>3000W (VA) ~ 3450W (VA) (100% ~ 115%)					
	Waveform	Pure Sine Wave (THD<5% Normal Load ①)			Pure Sine Wave (THD<3% Normal Load ②)		
	Output Voltage	100 / 110 / 115 / 120 VAC ± 5% (Dip Switch Selectable)			200 / 220 / 230 / 240 VAC ± 3% (Dip Switch Selectable)		
	Output Frequency	50 / 60 Hz ± 0.5% (Dip Switch Selectable)					
Input	DC Voltage	12VDC	24VDC	48VDC	12VDC	24VDC	48VDC
	Voltage Range	10.5~16.5VDC	21.0~33.0VDC	42.0~66.0VDC	10.5~16.5VDC	21.0~33.0VDC	42.0~66.0VDC
	No Load Current	≦3.8A@12VDC	≦2.0A@24VDC	≦1.0A@48VDC	≦3.8A@12VDC	≦2.0A@24VDC	≦1.0A@48VDC
	Power Saving Mode	<0.4A@12VDC	<0.2A@24VDC	<0.1A@48VDC	<0.4A@12VDC	<0.2A@24VDC	<0.1A@48VDC
	Efficiency (Max.)	90%	91%	92%	90%	93%	94%
Protection	Input Under-voltage Protection	10.5±0.3VDC	21.0±0.5VDC	42.0±1.0VDC	10.5±0.3VDC	21.0±0.5VDC	42.0±1.0VDC
	Input Under-voltage Alarm	11.0±0.3VDC	22.0±0.5VDC	44.0±1.0VDC	11.0±0.3VDC	22.0±0.5VDC	44.0±1.0VDC
	Input Under-voltage Recovery	12.5±0.3VDC	25.0±0.5VDC	50.0±1.0VDC	12.5±0.3VDC	25.0±0.5VDC	50.0±1.0VDC
	Input Over-voltage Protection	16.5±0.3VDC	33.0±0.5VDC	66.0±1.0VDC	16.5±0.3VDC	33.0±0.5VDC	66.0±1.0VDC
	Input Over-voltage Recovery	14.5±0.3VDC	29.0±0.5VDC	58.0±1.0VDC	14.5±0.3VDC	29.0±0.5VDC	58.0±1.0VDC
	Output Overload	Shutdown Output Voltage, restart to recovery					
	Output Short	Shutdown Output Voltage, restart to recovery					
	Over Temperature	Heat sink temperature over 80℃ ± 5℃, shutdown output voltage, recover automatically after heat sink temperature goes down to 60℃ ± 5℃					
	DC Input Reverse Polarity	By Fuse					
Environment	Operating Temperature	-20 ~ +40℃					
	Storage Temp. & Humidity	-30 ~ +70℃, 10~95% RH					
Safety & EMC	Safety Standards	Certified UL 458		--	Certified EN60950-1		
	EMC Standards	Certified FCC class A ③			Certified EN55022 class A ③, EN55024 EN61000-3-2, -3-3 EN61000-4-2, 3, 4, 5, 6, 8, 11		
	E-Mark	--			Certified CISPR 25; ISO 7637-2		
Control & Signal	LED Indicator	Input voltage level, output load level and faulty status					
	Accessory (Optional)	Remote Control : CR-8 / CR-16A ; Transfer Switch : TR-40					
	Dry Contact Terminal	By relay					
	Remote Control Terminal	6-port green terminal					
Other Information	Dimension (WxHxD)	255x158x442 mm / 10.04x6.22x17.40 inch					
	Packing	8.2kg; 2pcs / 17.4kg / 3.05CUFT					
	Cooling	Temperature & load controlled cooling fan					
	Application	Home and office appliances, portable power equipment, vehicle, yacht and off-grid solar power systems….etc.					

① : Normal Condition : Vin=12.5V / 25V / 50V Vo=100 / 110 / 115 / 120 VAC 80% Full load (PF=1.0)
② : Normal Condition : Vin=12.5V / 25V / 50V Vo=200 / 220 / 230 / 240 VAC 80% Full load (PF=1.0)
③ : Warning : This is a class A product. In a domestic environment this product may cause radio interference in which case the user may be required to take adequate measures.

Subject to change witout prior notice

SP-4000

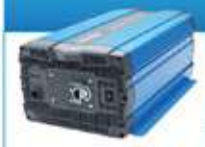

	Model	SP-4000-124	SP-4000-148	SP-4000-224	SP-4000-248
Output	Rating Power	4000W (VA)			
	Surge Power (1 Sec.)	<8000W (VA)			
	Maximum Output Power (1 Min)	>4000W (VA) ~ 4600W (VA) (100% ~ 115%)			
	Waveform	Pure Sine Wave (THD<5% Normal Load ①)		Pure Sine Wave (THD<3% Normal Load ②)	
	Output Voltage	100 / 110 / 115 / 120 VAC ± 5% (Dip Switch Selectable)		200 / 220 / 230 / 240 VAC ± 3% (Dip Switch Selectable)	
	Output Frequency	50 / 60 Hz ± 0.5% (Dip Switch Selectable)			
Input	DC Voltage	24VDC	48VDC	24VDC	48VDC
	Voltage Range	21.0~33.0VDC	42.0~66.0VDC	21.0~33.0VDC	42.0~66.0VDC
	No Load Current	≦2.0A@24VDC	≦1.0A@48VDC	≦2.0A@24VDC	≦1.0A@48VDC
	Power Saving Mode	<0.2A@24VDC	<0.1A@48VDC	<0.2A@24VDC	<0.1A@48VDC
	Efficiency (Max.)	91%	91%	90%	91%
Protection	Input Under-voltage Protection	21.0±0.5VDC	42.0±1.0VDC	21.0±0.5VDC	42.0±1.0VDC
	Input Under-voltage Alarm	22.0±0.5VDC	44.0±1.0VDC	22.0±0.5VDC	44.0±1.0VDC
	Input Under-voltage Recovery	25.0±0.5VDC	50.0±1.0VDC	25.0±0.5VDC	50.0±1.0VDC
	Input Over-voltage Protection	33.0±0.5VDC	66.0±1.0VDC	33.0±0.5VDC	66.0±1.0VDC
	Input Over-voltage Recovery	29.0±0.5VDC	58.0±1.0VDC	29.0±0.5VDC	58.0±1.0VDC
	Output Overload	Shutdown Output Voltage, restart to recovery			
	Output Short	Shutdown Output Voltage, restart to recovery			
	Over Temperature	Heat sink temperature over 80℃ ± 5℃, shutdown output voltage, recover automatically after heat sink temperature goes down to 60℃ ± 5℃			
	DC Input Reverse Polarity	By Fuse			
Environment	Operating Temperature	-20 ~ +40℃			
	Storage Temp. & Humidity	-30 ~ +70℃, 10~95% RH			
Safety & EMC	Safety Standards	Certified UL 458	--	Certified EN60950-1	
	EMC Standards	Certified FCC class A ③		Certified EN55022 class A ③, EN55024 EN61000-3-2, -3-3 EN61000-4-2, 3, 4, 5, 6, 8, 11	
	E-Mark	--		Certified CISPR 25; ISO 7637-2	
Control & Signal	LED Indicator	Input voltage level, output load level and faulty status			
	Accessory (Optional)	Remote Control : CR-8 / CR-16A ; Transfer Switch : TR-40			
	Dry Contact Terminal	By relay			
	Remote Control Terminal	6-port green terminal			
Other Information	Dimension (WxHxD)	255x158x462 mm / 10.04x6.22x18.19 inch			
	Packing	10kg; 2pcs / 21kg / 3.05CUFT			
	Cooling	Temperature & load controlled cooling fan			
	Application	Home and office appliances, portable power equipment, vehicle, yacht and off-grid solar power systems….etc.			

① : Normal Condition : Vin=25V / 50V Vo=100 / 110 / 115 / 120 VAC 80% Full load (PF=1.0)
② : Normal Condition : Vin=25V / 50V Vo=200 / 220 / 230 / 240 VAC 80% Full load (PF=1.0)
③ : Warning : This is a class A product. In a domestic environment this product may cause radio interference in which case the user may be required to take adequate measures.

Subject to change witout prior notice

Dimension

SP-700/1000

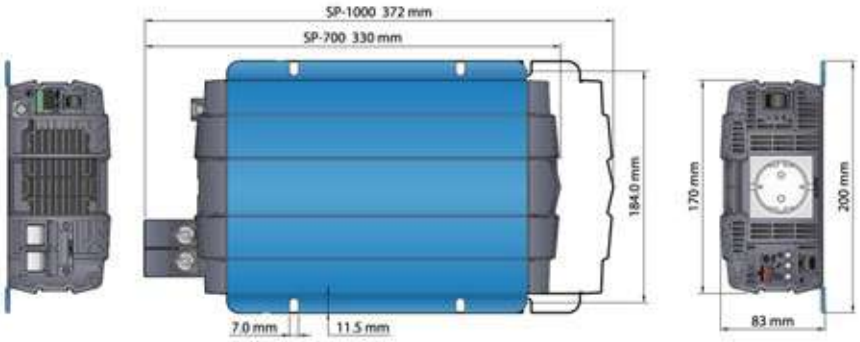

SP-1500/2000

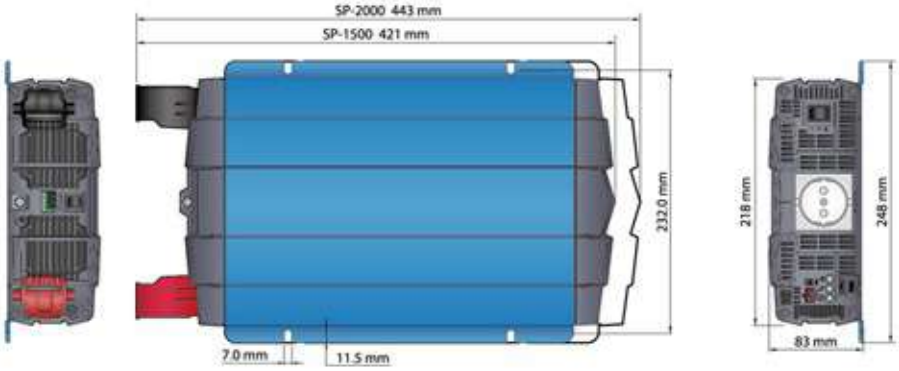

SP-3000/4000

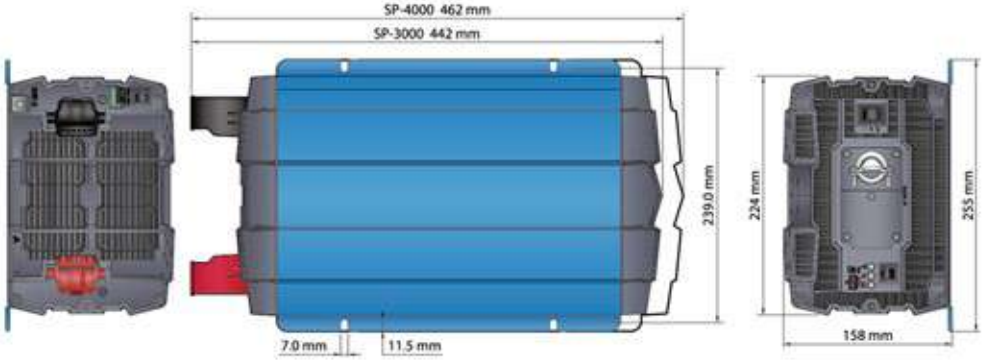

About COTEK

COTEK is committed to providing proactive service, innovative technology and total quality assurance since we were established in 1986. With Corporate Offices in Tao-yuan, Taiwan, COTEK is a technology-oriented company focusing on developing, designing and manufacturing products including:

- DC/AC Pure Sine Wave inverter-150 Watts ~ 4,000 Watts
- Inverter/Charger
- Battery Charger
- AC/DC Switching Mode Power Supply-5 Watts ~ 3,000 Watts
- LED Driver

Contact Us

No.33, Sec. 2, Renhe Rd., Daxi Dist., Taoyuan City 33548, Taiwan
Phone：+886-3-3891999 FAX：+886-3-3802333
http：// www.cotek.com.tw